BRACCIO

QUICK START GUIDE

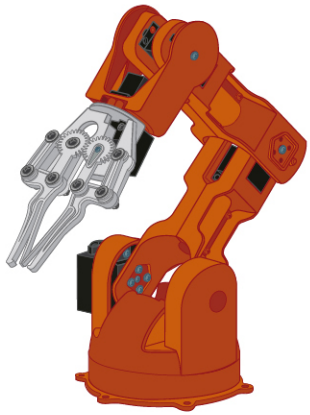

TINKERKIT

UNLOCK THE UNLIMITED POSSIBILITIES
OF ROBOTICS WITH THE BRACCIO

WELCOME

1. FOLLOW ASSEMBLY INSTRUCTIONS
2. CONNECT TO YOUR COMPUTER
3. ENJOY!

THIS KIT INCLUDES

- ✓ **PLASTIC PARTS**

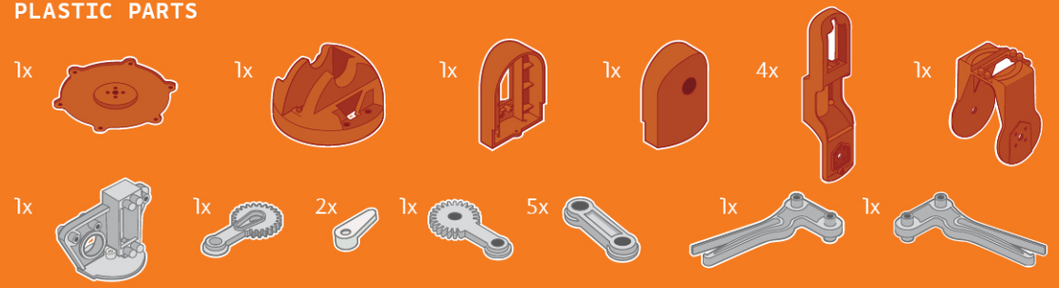

✓ **SCREWS**	52 x ⌀ 3 mm	4 x ⌀ 2 mm 7 x
✓ **FLAT WASHER**	16 x	
✓ **HEXAGON NUT**	7 x	
✓ **SPRINGS**	2 x	
✓ **SERVO MOTORS**	2 x SR 311, 4 x SR 431	
✓ **SHIELD**	1 x Arduino compatible shield	
✓ **POWER SUPPLY**	1 x 5 V , 5 A	
✓ **SCREWDRIVER**	1 x Phillips screwdriver	
✓ **BOX WRENCH**	1 x Double Hexagon Box Wrench	
✓ **SPIRAL PROTECTION**	1 x Spiral Cable Protection Wrap	

ASSEMBLY INSTRUCTIONS

CAUTION: DO NOT OVER-TIGHTEN SCREWS

1

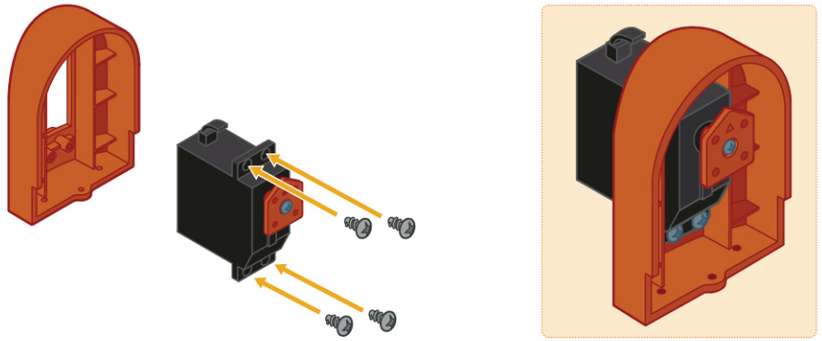

M2

4 × ∅ 3mm

2

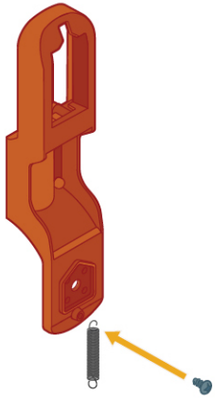

1 × ∅ 2mm

1 ×

3

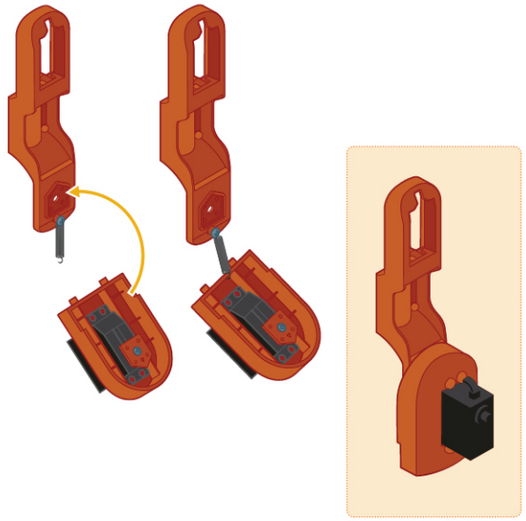

4

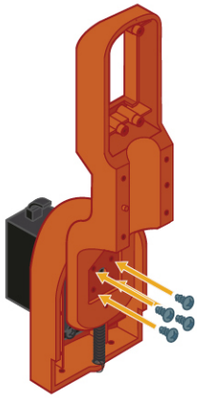

4 × ∅ 3mm

5

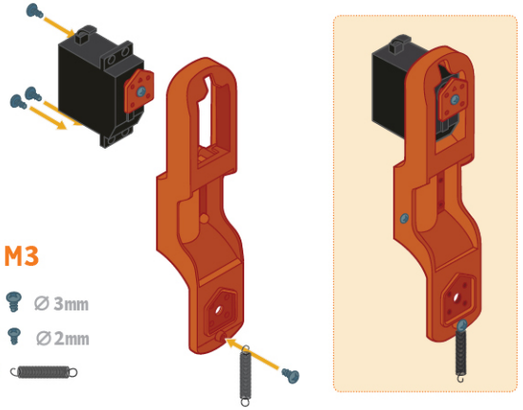

M3

3 × ∅ 3mm

1 × ∅ 2mm

1 ×

6

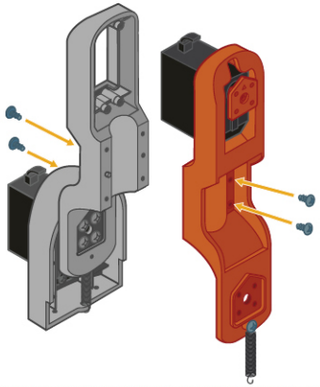

4 × ∅ 3mm

7

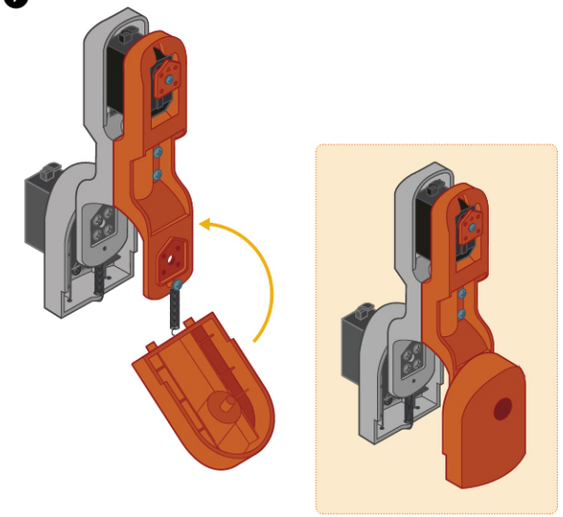

8

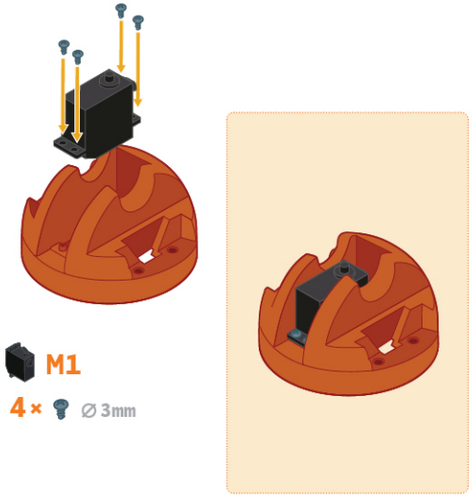

M1

4 × ∅ 3mm

9

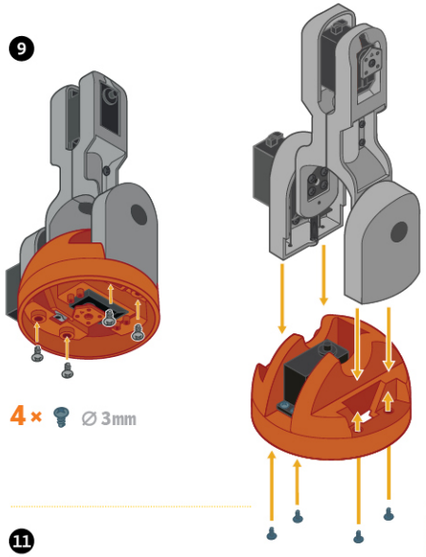

4 × ∅ 3mm

10

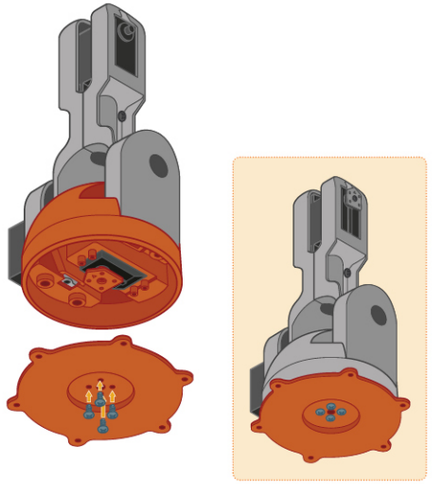

4 × ∅ 3mm

11

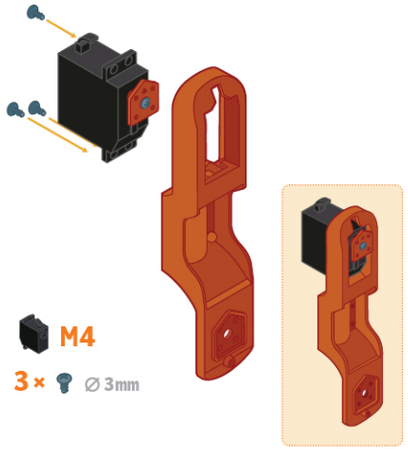

M4

3 × ∅ 3mm

12

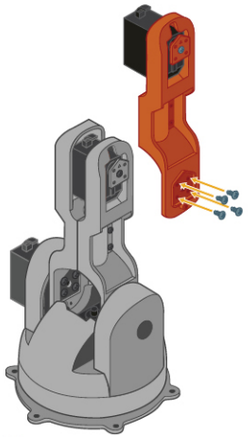

4 × ∅ 3mm

13

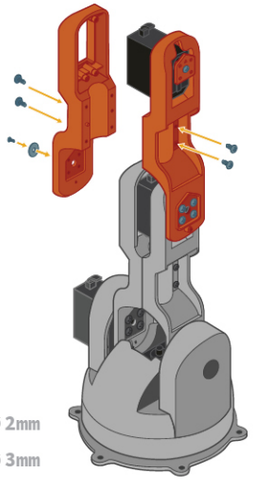

1 ×

1 × ∅ 2mm

4 × ∅ 3mm

14

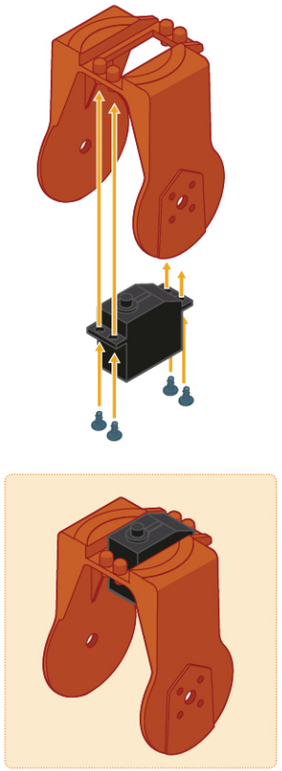

M5

4 × ∅ 3mm

15

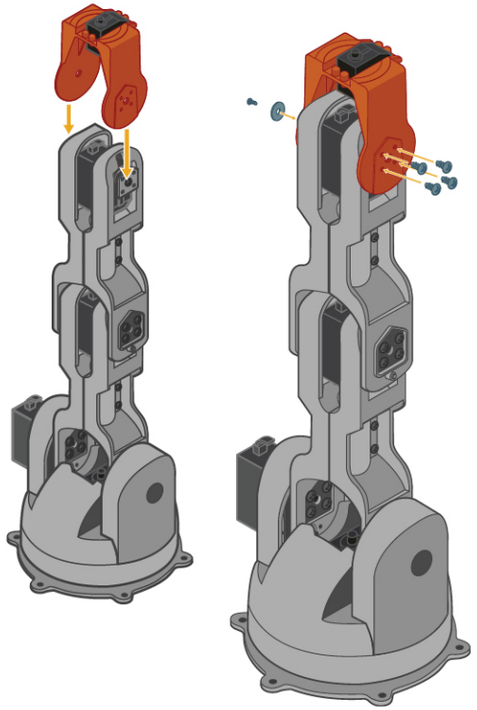

1 ×

1 × ∅ 2mm

4 × ∅ 3mm

16

1 ×

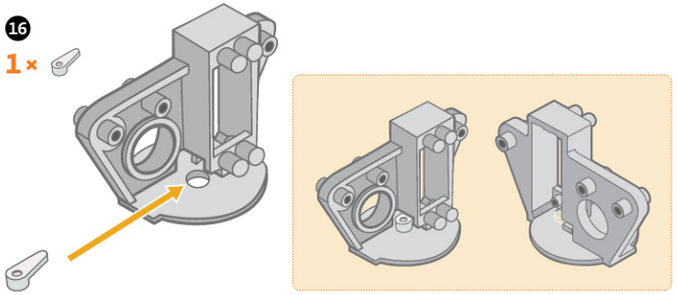

17

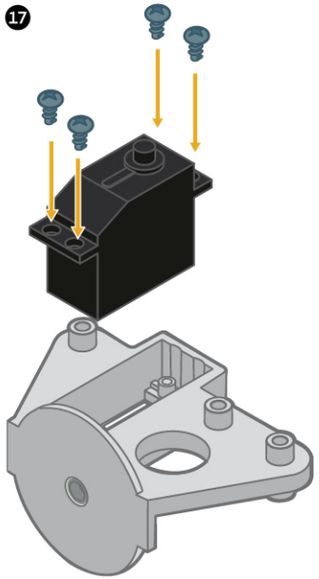

M6

4 × ∅ 3mm

18

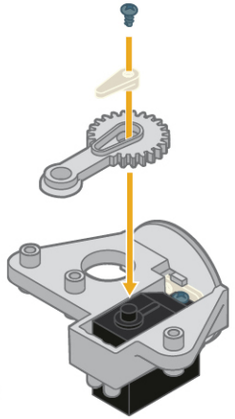

1 ×

1 × ∅ 3mm

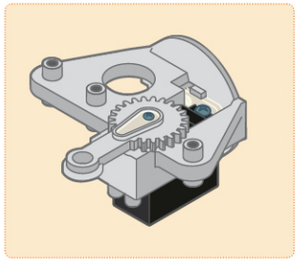

19

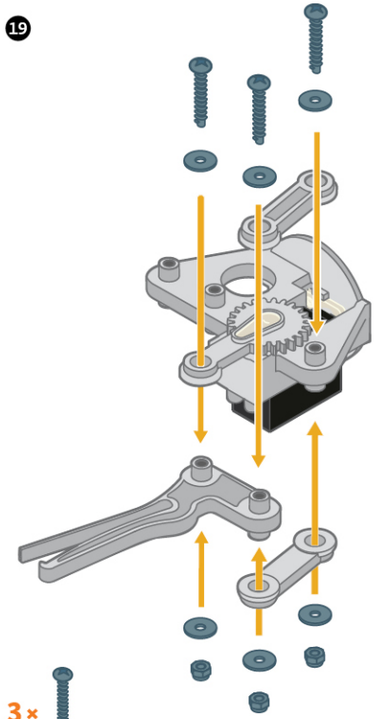

3 ×

7 ×

3 ×

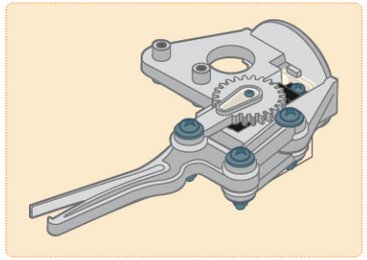

20

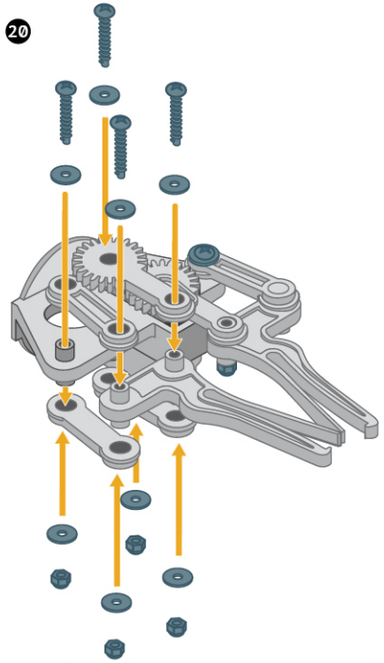

4 ×

8 ×

4 ×

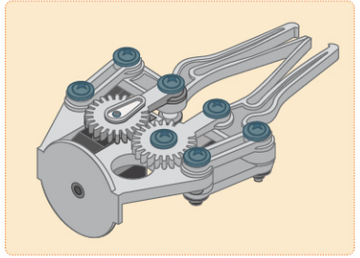

21

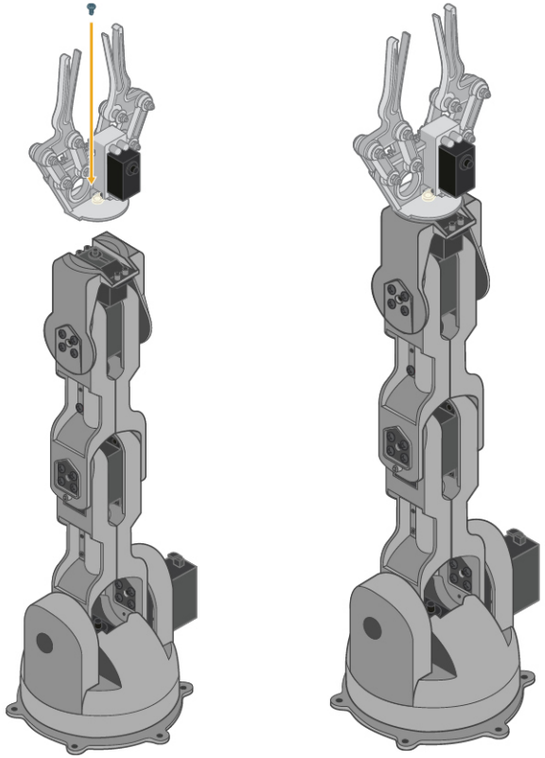

1 × ∅ 3mm

DONE!

UNLOCK THE UNLIMITED
POSSIBILITIES OF ROBOTICS
WITH THE BRACCIO

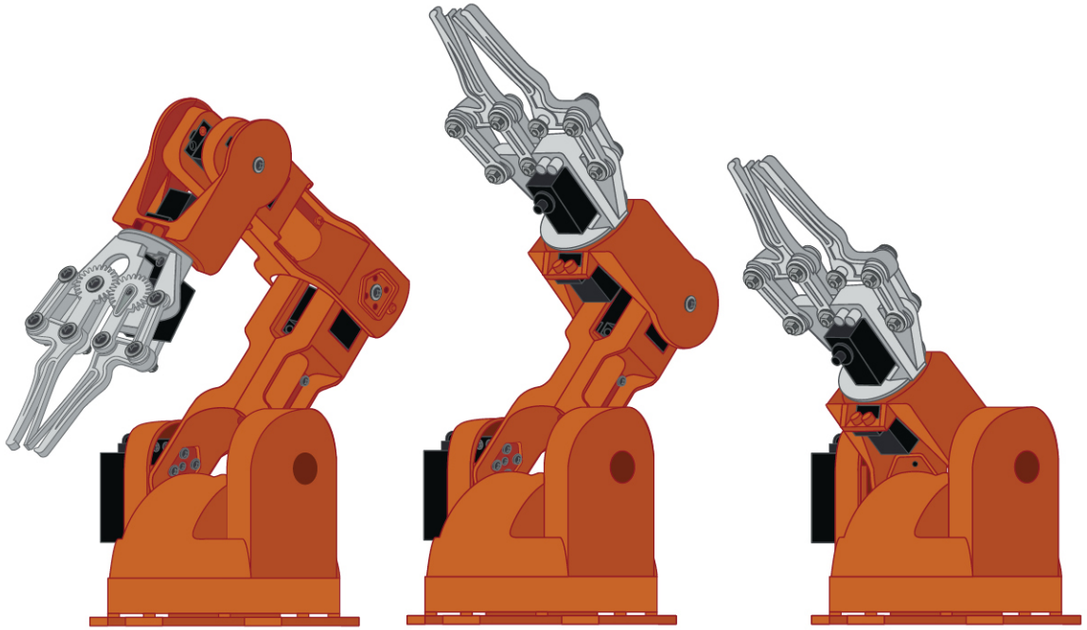

DESIGNED FOR VERSATILITY,
THE BRACCIO CAN SUPPORT VARIOUS
OBJECTS ON THE END OF THE ARM

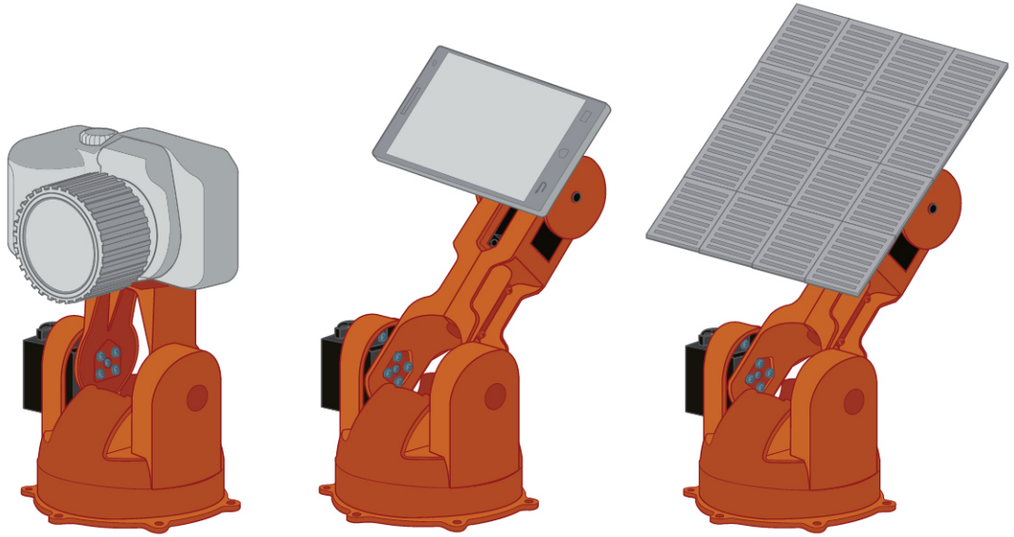

MOTORS ASSEMBLY

MOTOR "1" BASE
MOTOR "2" SHOULDER
MOTOR "3" ELBOW
MOTOR "4" VERTICAL WRIST
MOTOR "5" ROTATORY WRIST
MOTOR "6" GRIPPER

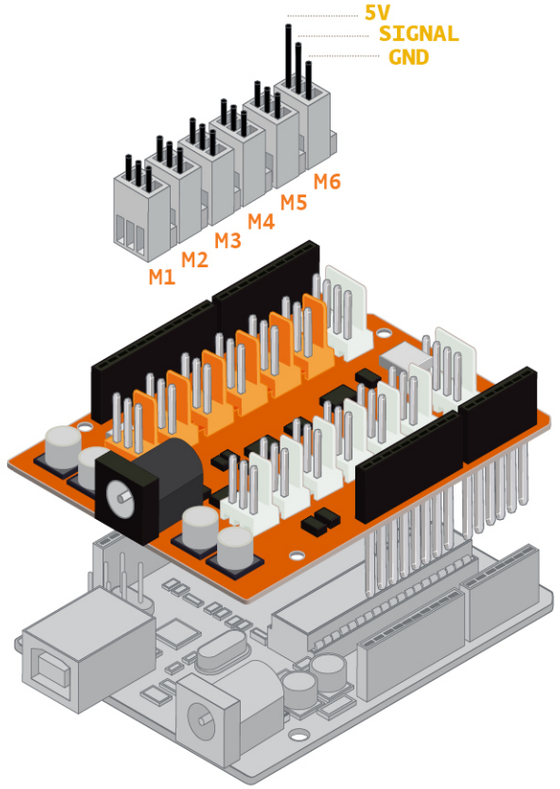

ARDUINO COMPATIBLE BOARDS

UNO	LEONARDO
UNO SMD	LEONARDO ETH
DUE	YUN
MEGA 2560	TIAN
MEGA ADK	UNO WIFI
ETHERNET	

CONNECTING TO YOUR COMPUTER

❶ DOWNLOAD THE SOFTWARE

Get the latest version of the Arduino Software from ARDUINO.ORG/DOWNLOADS

❷ CONNECT THE BRACCIO

Plug the USB cable to the control board port, and wait for hardware installation to finish

❸ CONNECT YOUR BOARD

Start the Arduino IDE

Select Tools → Board → Select the board you are using

Select the correct serial port from Tools → Port

❹ LOAD A SKETCH

Select a sketch from File → Examples → Braccio

Press the Upload button
and wait for the program to finish uploading

CONGRATULATIONS!
You are ready to experiment and play

ONLINE TUTORIALS AND INFORMATION:
ARDUINO.ORG/BRACCIO

❶ TESTBRACCIO90

"testBraccio90" is a setup sketch allowing you to check the alignment of all the servo motors. It is also the first sketch you need to run on the Braccio. The sketch will position the Braccio in the upright position as seen in the picture below. If it doesn't put the Braccio in the exact setting, you need to realign the position of the servo motors.

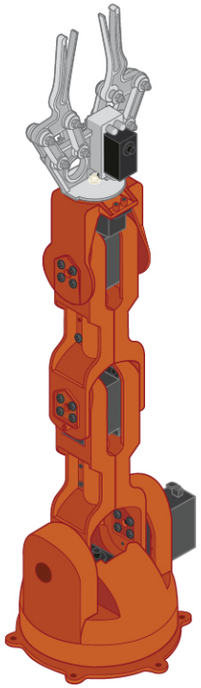

```
#include <Braccio.h>
#include <Servo.h>
```

M1 = base degrees
M2 = shoulder degrees
M3 = elbow degrees
M4 = vertical wrist degrees
M5 = rotatory wrist degrees
M6 = gripper degrees

```
Servo base;
Servo shoulder;
Servo elbow;
Servo wrist_ver;
Servo wrist_rot;
Servo gripper;
```

`Braccio.begin();`
Initialization functions and set up the initial position for Braccio.
All the servo motors will be positioned in the "safety" position: M1 = 90°, M2= 45°, M3 = 180°, M4 = 180°, M5 = 90°, M6 = 10°.

```
void setup() {
  Braccio.begin();
}
```

The sketch will position the Braccio in the upright position.

`Step Delay`: a milliseconds delay between the movement of each servo. Allowed values: from 10 to 30 msec.
M1 allowed values from 0° to 180°
M2 allowed values from 15° to 165°
M3 allowed values from 0° to 180°
M4 allowed values from 0° to 180°
M5 allowed values from 0° to 180°
M6 allowed values from 10° to 73°. (10°: the gripper is open, 73°: the gripper is closed).

```
void loop() {
                    //(step delay  M1,  M2,  M3,  M4,  M5,  M6);
  Braccio.ServoMovement(20,         90,  90,  90,  90,  90,  73);
}
```

❷ SIMPLEMOVEMENTS

The "simpleMovements" sketch shows you how each servo motor of the Braccio moves.

```
#include <Braccio.h>
#include <Servo.h>
```

M1 = base degrees
M2 = shoulder degrees
M3 = elbow degrees
M4 = vertical wrist degrees
M5 = rotatory wrist degrees
M6 = gripper degrees

```
Servo base;
Servo shoulder;
Servo elbow;
Servo wrist_ver;
Servo wrist_rot;
Servo gripper;
```

`Braccio.begin();`
Initialization functions and set up the initial position for Braccio.
All the servo motors will be positioned in the "safety" position: M1 = 90°, M2= 45°, M3 = 180°, M4 = 180°, M5 = 90°, M6 = 10°.

```
void setup() {
  Braccio.begin();
}
```

The `delay()` function lets you stop the Arduino from executing anything for a period of time.

`Step Delay`: a milliseconds delay between the movement of each servo. Allowed values: from 10 to 30 msec.
M1 allowed values from 0° to 180°
M2 allowed values from 15° to 165°
M3 allowed values from 0° to 180°
M4 allowed values from 0° to 180°
M5 allowed values from 0° to 180°
M6 allowed values from 10° to 73°. (10°: the gripper is open, 73°: the gripper is closed).

```
void loop() {
                    //(step delay  M1,  M2,  M3,  M4,  M5,  M6);
  Braccio.ServoMovement(20,         15,   0, 180, 180,   0,  73);
  delay(1000);
  Braccio.ServoMovement(20,        165, 180,   0,   0, 180,  10);
  delay(1000);
}
```

❸ TAKETHESPONGE

This example tells the Braccio to take the sponge from the table and show it to the user.

```
#include <Braccio.h>
#include <Servo.h>
```

M1 = base degrees
M2 = shoulder degrees
M3 = elbow degrees
M4 = vertical wrist degrees
M5 = rotatory wrist degrees
M6 = gripper degrees

```
Servo base;
Servo shoulder;
Servo elbow;
Servo wrist_ver;
Servo wrist_rot;
Servo gripper;
```

`Braccio.begin();`
Initialization functions and set up the initial position for Braccio.
All the servo motors will be positioned in the "safety" position: M1 = 90°, M2= 45°, M3 = 180°, M4 = 180°, M5 = 90°, M6 = 10°.

```
void setup() {
  Braccio.begin();
}
```

Starting position.
One second `delay`.
The braccio moves to the sponge.
Close the tongue to take the sponge.
Brings the sponge upwards.
Show the sponge.
Return to the start position.
Open the gripper.

For `Step Delay` and Motors values please refer to the previous sketches.

```
void loop() {
                      //(step delay  M1,  M2,  M3,  M4,  M5,  M6);
  Braccio.ServoMovement(20,         0,   45, 180, 180,  90,  10);
  delay(1000);
  Braccio.ServoMovement(20,         0,   90, 180, 180,  90,  10);
  Braccio.ServoMovement(10,         0,   90, 180, 180,  90,  60);
  Braccio.ServoMovement(20,         0,   45, 180,  45,   0,  60);
  Braccio.ServoMovement(20,       180,   45, 180,  45,   0,  60);
  Braccio.ServoMovement(20,         0,   90, 180, 180,  90,  60);
  Braccio.ServoMovement(20,         0,   90, 180, 180,  90,  10);
}
```

NOTES:

CERTIFICATE OF ORIGIN
Thank you for choosing a Tinkerkit product. This product was produced, assembled and tested in Italy. All parts but the motors come from Italy and all of the manufacturing, assembling, testing and packaging took place entirely in Italy.

MANUFACTURING
All parts used in this product comply with the RoHS Directive. The RoHS Directive prevents all new electrical and electronic equipment placed on the market in the European Economic Area from containing more than agreed levels of lead, cadmium, mercury, hexavalent chromium, poly-brominated biphenyls (PBB) and polybrominated diphenyl ethers (PBDE). The product is labelled with the CE logo, as it meet the electromagnetic compatibility standards set by the EU.
All parts are tested to meet EU consumer safety, health and environmental requirements.

RETURN POLICY
We put all of our expertise and care in this product. Should you, despite all our efforts, find any faults in it, please contact your distributor to find out whether you qualify for a product replacement.

LIMITED WARRANTY STATEMENT
1. WARRANTIES.
1.1
ARDUINO warrants that its products will conform to the Specifcations. This warranty lasts for one (1) year from the date of the sale. ARDUINO shall not be liable for any defects that are caused by neglect, misuse or mistreatment by the Customer, including improper installation or testing, or for any products that have been altered or modifed in any way by the Customer. Moreover, ARDUINO shall not be liable for any defects that result from the Customer's design, specifcations or instructions for such products. Testing and other quality control techniques are used to the extent ARDUINO deems necessary.

1.2
If any ARDUINO products fail to conform to the warranty set forth above, ARDUINO's sole liability shall be to replace such products. ARDUINO's liability shall be limited to products that are determined by ARDUINO not to conform to such warranty. If ARDUINO elects to replace such products, ARDUINO shall be given a reasonable time to provide replacements. Replaced products shall be warranted for a new full warranty period.

1.3
EXCEPT AS SET FORTH ABOVE, PRODUCTS ARE PROVIDED "AS IS" AND "WITH ALL FAULTS". ARDUINO DISCLAIMS ALL OTHER WARRANTIES, EXPRESS OR IMPLIED, REGARDING PRODUCTS, INCLUDING, BUT NOT LIMITED TO, ANY IMPLIED WARRANTIES OF MERCHANTABILITY OR FITNESS FOR A PARTICULAR PURPOSE.

1.4
The Customer agrees that prior to using any systems that include ARDUINO products, the Customer will test such systems and the functionality of the products as used in such systems. ARDUINO may provide technical, applications or design advice, quality characterization, reliability data or other services. The Customer acknowledges and agrees that providing these services shall not expand or otherwise alter ARDUINO's warranties, as set forth above, and that no additional obligations or liabilities shall arise from ARDUINO providing such services.

1.5
ARDUINO products are not authorized for use in safety-critical applications where a failure of the ARDUINO product would reasonably be expected to cause severe personal injury or death. Safety-critical applications include, without limitation, life support devices and systems, equipment or systems for the operation of nuclear facilities and weapons systems. ARDUINO products are neither designed nor intended for use in military or aerospace applications or environments, nor for automotive applications or the automotive environment. The Customer acknowledges and agrees that any such use of ARDUINO products is solely at the Customer's risk, and that the Customer is the sole responsible for compliance with all legal and regulatory requirements in connection with such use.

1.6
The Customer acknowledges and agrees that the Customer is the sole responsible for compliance with all legal, regulatory and safety-related requirements concerning the products and any use of ARDUINO products in the Customer's applications, notwithstanding any applications-related information or support that may be provided by ARDUINO.

2. CONSEQUENTIAL DAMAGES WAIVER.
In no event shall ARDUINO be liable to the Customer or any third parties for any special, collateral, indirect, punitive, incidental, consequential or exemplary damages in connection with or arising out of the products provided hereunder, regardless of whether ARDUINO has been advised of the possibility of such damages. This section will survive the termination of the warranty period.

3. CHANGES TO SPECIFICATIONS.
ARDUINO may make changes to specifications and product descriptions at any time, without notice. The Customer must not rely on the absence or characteristics of any features or instructions marked "reserved" or "undefined". ARDUINO reserves these for future definition and shall have no responsibility whatsoever for conflicts or incompatibilities arising from future changes to them. The product information on the Web Site or Materials is subject to change without notice. Do not finalize a design with this information.

FCC COMPLIANCE
This device complies with Part 15 of the FCC Rules. Operation is subject to the following two conditions: (1) this device may not cause harmful interference, and (2) this device must accept any interference received, including interference that may cause undesired operation.
NOTE: This equipment has been tested and found to comply with the limits for a Class B digital device, pursuant to part 15 of the FCC Rules. These limits are designed to provide reasonable protection against harmful interference in a residential installation. This equipment generates, uses and can radiate radio frequency energy and, if not installed and used in accordance with the instructions, may cause harmful interference to radio communications. However, there is no guarantee that interference will not occur in a particular installation.
If this equipment does cause harmful interference to radio or television reception, which can be determined by turning the equipment off and on, the user is encouraged to try to correct the interference by one or more of the following measures:

→ Reorient or relocate the receiving antenna;
→ Increase the separation between the equipment and receiver;
→ Connect the equipment into an outlet on a circuit different from that to which the receiver is connected;
→ Consult the dealer or an experienced radio/TV technician for help.

The following parties are responsible for the compliance of radio frequency equipment with the applicable standards: in the case of equipment subject to authorization under the verification procedure, the manufacturer or, in the case of imported equipment, the importer. If subsequent to manufacture and importation, the radio frequency equipment is modified by any party not working under the authority of the responsible party, the party performing the modification becomes the new responsible party.

Manufactured by
ARDUINO S.r.l.
Via Romano, 12
10010 Scarmagno
Italy

RoHS COMPLIANT

POWERED BY

ARDUINO

TINKERKIT

ARDUINO.ORG/BRACCIO